Czech Metrology Institute
Notified Body No. 1383
Okružní 31, 638 00 Brno, Czech Republic
tel. +420 545 555 111, fax +420 545 222 728
www.cmi.cz

V 3112

EU-TYPE EXAMINATION CERTIFICATE

Number: TCM 142/10 - 4738

Addition 13

This addition replaces all previous versions of this certificate in full wording.

In accordance: with Directive 2014/32/EU of the European Parliament and of the Council on the harmonisation of the laws of the Member States relating to the making available on the market of measuring instruments (implemented in Czech Republic by Government Order No. 120/2016 Coll.).

Manufacturer: JANZ – Contagem e Gestão de Fluídos, S. A.
Avenida Infante D. Henrique, 286
1950-421 Lisboa
Portugal

For: water meter – volumetric

Type: JV400

Accuracy class: 2

Temperature class: T30 or T50

Valid until: 6 April 2030

Document No: 0115-CS-A013-10

Description: Essential characteristics, approved conditions and special conditions, if any, are described in this certificate.

Date of issue: 30 June 2022

Certificate approved by:

Český metrologický institut

RNDr. Pavel Klenovský

1 Characteristics of instrument

The water meters type JV400 are designed to measure, memorise and display the volume at metering conditions of water passing through the measurement transducer in the sense of the Directive 2014/32/EU of the European Parliament and of the Council of the harmonisation of the laws of the Member States relating to the making available on the market of measuring instruments (implemented in Czech Republic by Government Order No. 120/2016 Coll.), as amended.

The volumetric water meters type JV400 are positive displacement meters with rotary piston. The meters consist of a brass casted body with connecting threads, a wet volumetric chamber with oscillating piston (smooth or grooved), shaft made of plastic on the side of the volumetric chamber, plastic magnet holder with a ball made of hard metal touching a saphire stone on the side of the register, a magnetic coupling realized by two magnets - one on the dry and one on the wet side, an indicating device, a register cap and clamp on cover connecting the indicating device to the body and covering the indicating device.

The volumetric water meters type JV400 admit also the manifold type alternative. This alternative differs from the basic alternative by the shape of the body and by water flow direction and it contains additional parts like volumetric chamber adapter or additional gear train.

The possible realizations of the indicating device are following:

1. Dry flat register,
2. Dry register with inclined reading,
3. Super-dry register with a copper housing and a glass cap.

Each of the registers can be formed by numbered rollers consisting of (a) four black drums displaying volume in cubic meters, two red drums and two red rotary pointers displaying smaller submultiples of cubic meters or (b) four black drums displaying volume in cubic meters, two red drums and three red rotary pointers displaying smaller submultiples of cubic meters or (c) five black drums displaying volume in cubic meters, two red drums and two red rotary pointers displaying smaller submultiples of cubic meters or (d) four black drums displaying volume in cubic meters, three red drums and one red rotary pointer displaying smaller submultiples of cubic meters or (e) four black drums displaying volume in cubic meters, three red drums and two red rotary pointers displaying smaller submultiples of cubic meters or (f) five black drums displaying volume in cubic meters, three red drums and one rotary pointer displaying smaller submultiples of cubic meters or (g) six black drums displaying volume in cubic meters, one red drum and two rotary pointers displaying smaller submultiples of cubic meters or (h) six black drums displaying volume in cubic meters, two red drums and one rotary pointer displaying smaller submultiples of cubic meters or (i) six black drums displaying volume in cubic meters, two red drums and two rotary pointers displaying smaller submultiples of cubic meters or (j) seven black drums displaying volume in cubic meters, one red drum and two rotary pointers displaying smaller submultiples of cubic meters. There is a star wheel with six arms in the mechanical indicating device, which can be used for rapid testing.

The water meters can be equipped by a reed impulse transmitter or an inductive sensor (both programmed electronically) or by other devices, all certified optionally. The water meters can be also pre-equipped for further installation of such devices.

The water meter can by equipped by a radio modul (Add ON or Embedded), that has not influence on metrology parameters of the water meter but it was not individually tested.

The water meters shall be installed to operate in arbitrary positions.

2 Main characteristics

Manufacturer:	Janz - Contagem e Gestao de Fluídos, S.A.				
Model number:	JV400				
Nominal diameter:	15 or 20	20 or 25	25	32	40
Type details:					
Q_1 [m³/h]:	flowrates are shown in Table *Basic metrological data (flowrates)*				
Q_2 [m³/h]:					
Q3 [m3/h]:					
Q_4 [m³/h]:					
Q_3/Q_1:	800; 630; 500; 400; 315; 250; 200; 160; 125; 100; 80; 63; 50; 40				500; 400; 315; 250; 200; 160; 125; 100; 80; 63; 50; 40

Q_2/Q_1:	1.6				
Q_3/Q_4:	1.25				
Measuirng principle:	volumetric				
Accuracy class:	2				
Maximum permissible error for the lower flowrate zone (MPE_l):	±5 %				
Maximum permissible error for the upper flowrate zone (MPE_u):	±2 % for water having a temperature ≤ 30 °C ±3 % for water having a temperature > 30 °C				
Temperature class:	T30 or T50				
Water pressure class:	MAP 10 or MAP 16				
Pressure loss class:	ΔP 63 for Q_3 2.5 m³/h; ΔP 25 for Q_3 1.6 m³/h	ΔP 63			
Environmental class: [1]	B, O				
Electromagnetic environment: [1]	E1				
Mechanical class: [1]	M1				
Maximum admissible temperature [°C]:	50				
Maximum admissible pressure [MPa]:	1.6				
Orientation limitation:	arbitrary				
Resolution of the indicating device [dm³]:	0.002	0.02			0.2
Indicating range [m³]:	9 999 or 99 999		99 999 or 999 999		999 999. or 9 999 999
Resolution of the device for rapid testing [pulse/ dm³]:	60.0	58.0	44.291	21.270	11.500	5.580
EUT testing requirements (OIML R 49-2:2013, 8.1.8):					
Category:	Positive displacement water meters				
Case:	A				
Installation details:					
Connection type (screw thread):	G¾"B or G⅞"B or G1"B	G1"B or G1¼"B	G1¼"B	G1½"B	G2"B
Minimum straight length of inlet pipe [mm]:	0				
Minimum straight length of outlet pipe [mm]:	0				
Flow conditioner (details if required):	No				
Mounting:	in line or manifold meter	in line meter			
Orientation:	arbitrary				
Other relevant information:	-				
Length [mm]:	110 to 190		260		300
Reed sensor power supply (U_{max} / I_{max}): [2]	max. 48 V DC/AC/ 50 mA				
Inductive sensor power supply (U_{max} / I_{max}): [2]	max. 24 V DC/ 20 mA				

[1] Applicable for water meters equipped with electronic ancillary device. Information specified by the manufacturer.
[2] Ancillary devices – reed sensor and inductive sensor –have not been tested.

Basic metrological data (flowrates)

Manufacturer:	Janz											
Model number:	JV400											
Nominal diameter:	15											
Type details:												
Q_1 [m³/h]:	0.0032	0.0040	0.0051	0.0064	0.0080	0.0100	0.0128	0.0160	0.020	0.025	0.032	0.040
Q_2 [m³/h]:	0.0051	0.0064	0.0081	0.0102	0.0128	0.0160	0.0205	0.0256	0.032	0.041	0.051	0.064
Q_3 [m³/h]:	1.600	1.600	1.600	1.600	1.600	1.600	1.600	1.600	1.600	1.600	1.600	1.600
Q_4 [m³/h]:	2.00	2.00	2.00	2.00	2.00	2.00	2.00	2.00	2.00	2.00	2.00	2.00
Q_3/Q_1:	500	400	315	250	200	160	125	100	80	63	50	40

Manufacturer:	Janz						
Model number:	JV400						
Nominal diameter:	15 or 20						
Type details:							
Q_1 [m³/h]:	0.0031	0.0040	0.0050	0.0063	0.0079	0.0100	0.0125
Q_2 [m³/h]:	0.0050	0.0063	0.0080	0.0100	0.0127	0.0160	0.0200
Q_3 [m³/h]:	2.50	2.50	2.50	2.50	2.50	2.50	2.50
Q_4 [m³/h]:	3.13	3.13	3.13	3.13	3.13	3.13	3.13
Q_3/Q_1:	800	630	500	400	315	250	200

Manufacturer:	Janz						
Model number:	JV400						
Nominal diameter:	15 or 20						
Type details:							
Q_1 [m³/h]:	0.016	0.020	0.025	0.031	0.040	0.050	0.063
Q_2 [m³/h]:	0.025	0.032	0.040	0.050	0.063	0.080	0.100
Q_3 [m³/h]:	2.50	2.50	2.50	2.50	2.50	2.50	2.50
Q_4 [m³/h]:	3.13	3.13	3.13	3.13	3.13	3.13	3.13
Q_3/Q_1:	160	125	100	80	63	50	40

Manufacturer:	Janz						
Model number:	JV400						
Nominal diameter:	20 or 25						
Type details:							
Q_1 [m³/h]:	0.0050	0.0063	0.0080	0.0100	0.0127	0.0160	0.0200
Q_2 [m³/h]:	0.0080	0.0102	0.0128	0.0160	0.0203	0.0256	0.0320
Q_3 [m³/h]:	4.0	4.0	4.0	4.0	4.0	4.0	4.0
Q_4 [m³/h]:	5.0	5.0	5.0	5.0	5.0	5.0	5.0
Q_3/Q_1:	800	630	500	400	315	250	200

Manufacturer:	Janz						
Model number:	JV400						
Nominal diameter:	20 or 25						
Type details:							
Q_1 [m³/h]:	0.025	0.032	0.040	0.050	0.063	0.080	0.100
Q_2 [m³/h]:	0.040	0.051	0.064	0.080	0.102	0.128	0.160
Q_3 [m³/h]:	4.0	4.0	4.0	4.0	4.0	4.0	4.0
Q_4 [m³/h]:	5.0	5.0	5.0	5.0	5.0	5.0	5.0
Q_3/Q_1:	160	125	100	80	63	50	40

Manufacturer:	Janz						
Model number:	JV400						
Nominal diameter:	25						
Type details:							
Q_1 [m³/h]:	0.0079	0.0100	0.0126	0.0158	0.0200	0.0252	0.0315
Q_2 [m³/h]:	0.0126	0.0160	0.0202	0.0252	0.0320	0.0403	0.0504
Q_3 [m³/h]:	6.30	6.30	6.30	6.30	6.30	6.30	6.30
Q_4 [m³/h]:	7.88	7.88	7.88	7.88	7.88	7.88	7.88
Q_3/Q_1:	800	630	500	400	315	250	200

Manufacturer:	Janz						
Model number:	JV400						
Nominal diameter:	25						
Type details:							
Q_1 [m³/h]:	0.039	0.050	0.063	0.079	0.100	0.126	0.158
Q_2 [m³/h]:	0.063	0.081	0.101	0.126	0.160	0.202	0.252
Q_3 [m³/h]:	6.30	6.30	6.30	6.30	6.30	6.30	6.30
Q_4 [m³/h]:	7.88	7.88	7.88	7.88	7.88	7.88	7.88
Q_3/Q_1:	160	125	100	80	63	50	40

Manufacturer:	Janz						
Model number:	JV400						
Nominal diameter:	32						
Type details:							
Q_1 [m³/h]:	0.013	0.016	0.020	0.025	0.032	0.040	0.050
Q_2 [m³/h]:	0.020	0.025	0.032	0.040	0.051	0.064	0.080
Q_3 [m³/h]:	10.0	10.0	10.0	10.0	10.0	10.0	10.0
Q_4 [m³/h]:	12.5	12.5	12.5	12.5	12.5	12.5	12.5
Q_3/Q_1:	800	630	500	400	315	250	200

Manufacturer:	Janz						
Model number:	JV400						
Nominal diameter:	32						
Type details:							
Q_1 [m³/h]:	0.063	0.080	0.100	0.125	0.159	0.200	0.250
Q_2 [m³/h]:	0.100	0.128	0.160	0.200	0.254	0.320	0.400
Q_3 [m³/h]:	10.0	10.0	10.0	10.0	10.0	10.0	10.0
Q_4 [m³/h]:	12.5	12.5	12.5	12.5	12.5	12.5	12.5
Q_3/Q_1:	160	125	100	80	63	50	40

Manufacturer:	Janz											
Model number:	JV400											
Nominal diameter:	40											
Type details:												
Q_1 [m³/h]:	0.032	0.040	0.051	0.064	0.080	0.100	0.128	0.160	0.200	0.254	0.032	0.400
Q_2 [m³/h]:	0.051	0.064	0.081	0.102	0.128	0.160	0.205	0.256	0.320	0.406	0.512	0.640
Q_3 [m³/h]:	16.0	16.0	16.0	16.0	16.0	16.0	16.0	16.0	16.0	16.0	16.0	16.0
Q_4 [m³/h]:	20.0	20.0	20.0	20.0	20.0	20.0	20.0	20.0	20.0	20.0	20.0	20.0
Q_3/Q_1:	500	400	315	250	200	160	125	100	80	63	50	40

3 Tests

Technical tests of the water meters type JV400 were performed in compliance with the International Recommendation OIML R 49 Edition 2006 (E) with conformity to EN 14154+A2:2011, Test Reports No. 6015-PT-P0018-10, No. 6015-PT-P0104-11, No. 6015-PT-P0025-12, No. 6015-PT-P0024-13, No. 6015-PT-P0041-13, No. 6015-PT-P0014-14, No. 6015-PT-P0001-15 and 6015-PT-P0004-15.

Technical assessment of the JV400 water meters was performed in compliance with the Directive 2014/32/EU, Test Report No. 6015-PT-P0043-17 and 6015-PT-P0013-20.

Technical tests of the water meters type JV400 were performed in compliance with the International Recommendation OIML R 49 Edition 2013 (E) with conformity to EN ISO 4064-2:2017, Test Report No. 6015-PT-P0022-20, No. 6015-PT-P0026-21 and No. 6015-PT-P0012-22.

4 Conformity marks and inscription

The water meters type JV400 shall be clearly and indelibly marked with the following information:

- Water meter type
- Unit of measurement (m^3)
- Numerical value Q_3 in m^3/h (Q_3 ×.×) and the ratio Q_3 / Q_1,
- EU-type examination certificate number
- Manufacturer´s name, registered trade name or registered trade mark
- Post address of manufacturer
- Year of manufacture, two last digits of the year of manufacture, or the month and year of manufacture
- Serial number (as near as possible to the indicating device)
- Direction of flow, by means of an arrow (shown on both sides of the body or on one side only provided the direction of flow arrow is easily visible under all circumstances)
- Maximum admissible pressure (MAP ××)
- The temperature class (T××)
- The pressure loss class (ΔP ××)
- The installation sensitivity class (Ux Dx)
- CE marking and metrology marking in line with the Directive 2014/32/EU

and if the water meter is equipped with impulse transmitter or inductive sensor:

- Output signals for ancillary devices (type / levels)
- External power supply requirements (voltage – frequency)
- Sensor reading (impulse / L)

These markings shall be visible without dismantling the water meter after the instrument has been placed on the market or put into use. Examples are in Figure 1 and Figure 2.

5 Additional specifications

The water meters type JV400 shall be put onto the market in line with the procedure of conformity assessment according to the Annex D or F of the Directive 2014/32/EU as well as in compliance with the technical description of this report and shall be tested in accordance with the requirements determined in EN ISO 4064-1:2017, respectively OIML R 49-1:2013.

A metrological test may only be performed by a producer, or a notified body respectively in line with the conformity assessment procedure by the D or F Annexes of the Directive 2014/32/EU, respectively.

6 Ensuring the integrity of the instruments

The sealing is realized by embedding of the clamp on cover of the meter to the body of the meter sizes DN15 and DN20 (Figure 1). The cover can be removed only destroying this part. The cover has to be equipped with save guarding marks. The same solution is used also for the manifold alternative.
Alternatively the connection of the cover of the meter and the body of the meter has to be sealed by a wire with leaden seal (Figure 4). The same solution is used also for the meters sizes DN25, DN32 and DN40 (Figure 2).

If the meter is equipped by the reed impulse transmitter or the inductive transmitter, the screws fixing the transmitter to the meter have to be sealed. The location and type of the seal is described in Figure 3.
If the meter is equipped by the radio modul, for Add ON version, the location and type of the seals (sealing labels) are described in Figure 12 and 13. For Embedded versions, there are no seals and ensuring of the water meter is according to Figure 14 and 15.

7 Drawing of the instrument

Water meters type JV400 are manufactured according to the technical documentation of manufacturer. Technical documentation contains following drawings:

Document reference	Date	Brief description
9 0016 0149 f1a	15.12.2009	assembly drawing (Q_3 = 2.5/4 m^3/h)
9 0016 0149 f2	5.5.2011	assembly drawing (Q_3 = 6.3 m^3/h)
9 0016 0149 f3	20.4.2011	assembly drawing (Q_3 = 10/16 m^3/h)
9 0016 0149 f4	16.12.2009	body – view and sealing (Q_3 = 2.5/4 m^3/h)
9 0016 0149 f5	20.4.2011	body – view and sealing (Q_3 = 6.3/10/16 m^3/h)
9 0016 0149 f6a	16.12.2009	sensors – view and sealing (Q_3 = 2.5/4 m^3/h)
9 0016 0149 f7	26.4.2011	sensors – view and sealing (Q_3 = 6.3/10/16 m^3/h)
9 0016 0149 f8a	31.8.2011	assembly drawing – manifold type (Q_3 = 2.5/4 m^3/h)
9 0016 0149 f9a	31.8.2011	assembly drawing – inclined register (Q_3 = 2.5/4 m^3/h)
9 0016 0149 f10	18.12.2009	assembly drawing – superdry register
9 0016 0149 f11a	31.8.2011	sealing (Q_3 = 2.5/4 m^3/h)
9 0016 0149 f12 i	8.6.2017	dials Q_3 = 2.5 m^3/h
9 0016 0149 f12.1 b	8.6.2017	dial Q_3 = 2.5 m^3/h; with 3 pointers
9 0016 0149 f13 f	7.6.2017	superdry dial Q_3 = 2.5 m^3/h
9 0016 0149 f14 h	8.6.2017	dials Q_3 = 2.5 m^3/h; inclined reading
9 0016 0149 f15 d	8.6.2017	dials Q_3 = 4 m^3/h
9 0016 0149 f16 d	8.6.2017	superdry dial Q_3 = 4 m^3/h
9 0016 0149 f17 d	8.6.2017	dials Q_3 = 4 m^3/h; inclined reading
9 0016 0149 f18 d	8.6.2017	dials Q_3 = 6.3 m^3/h
9 0016 0149 f19 d	8.6.2017	superdry dial Q_3 = 6.3 m^3/h
9 0016 0149 f20 d	8.6.2017	dials Q_3 = 10 m^3/h
9 0016 0149 f21 d	8.6.2017	superdry dial Q_3 = 10 m^3/h
9 0016 0149 f22 d	23.6.2017	dials Q_3 = 16 m^3/h
9 0016 0149 f23 d	8.6.2017	superdry dial Q_3 = 16 m^3/h
9 0016 0149 f24	24.5.2013	assembly drawing – grooved piston
9 0016 0149 F6c	16.02.2022	Sensors and sealing Q3=2,5/4
9 0016 0149 F6.1	16.02.2022	Sensors and sealing Q3=2,5/4 Embedded
9 0016 0149 F7b	16.02.2022	Sensors and sealing Q3=6,3/10/16
9 0016 0149 F7.1	16.02.2022	Sensors and sealing Q3=6,3/10/16 Embedded

History of additions

Addition No.	Description
Addition 0	Issuing certificate
Addition 1	Changed drawings of the dials
Addition 2	Added new dimensions DN20, DN25, DN32, DN40
Addition 3	Added new indicating device
Addition 4	Added new oscillating piston
Addition 5	Added new pressure loss class for DN15 at 1.6 m^3/h and new indicating device

Addition 6	Formal changes described the inductive sensors (not certified)
Addition 7	Changed pressure loss class for DN15 at 1.6 m^3/h
Addition 8	Formal changes on description of Figure 3
Addition 9	Added postal address and formal revision in sense of 2014/32/EU
Addition 10	Technical assessment in compliance with the Directive 2014/32/EU
Addition 11	Technical tests and assessment in compliance with OIML R 49 Edition 2013 (E) and EN ISO 4064:2017
Addition 12	Added table with Q_3 = 1.6 m^3/h R500 for DN15
Addition 13	Added influence of radio modul on the water meter

Figure 1: The external view and the sealing of the JV400 water meter:

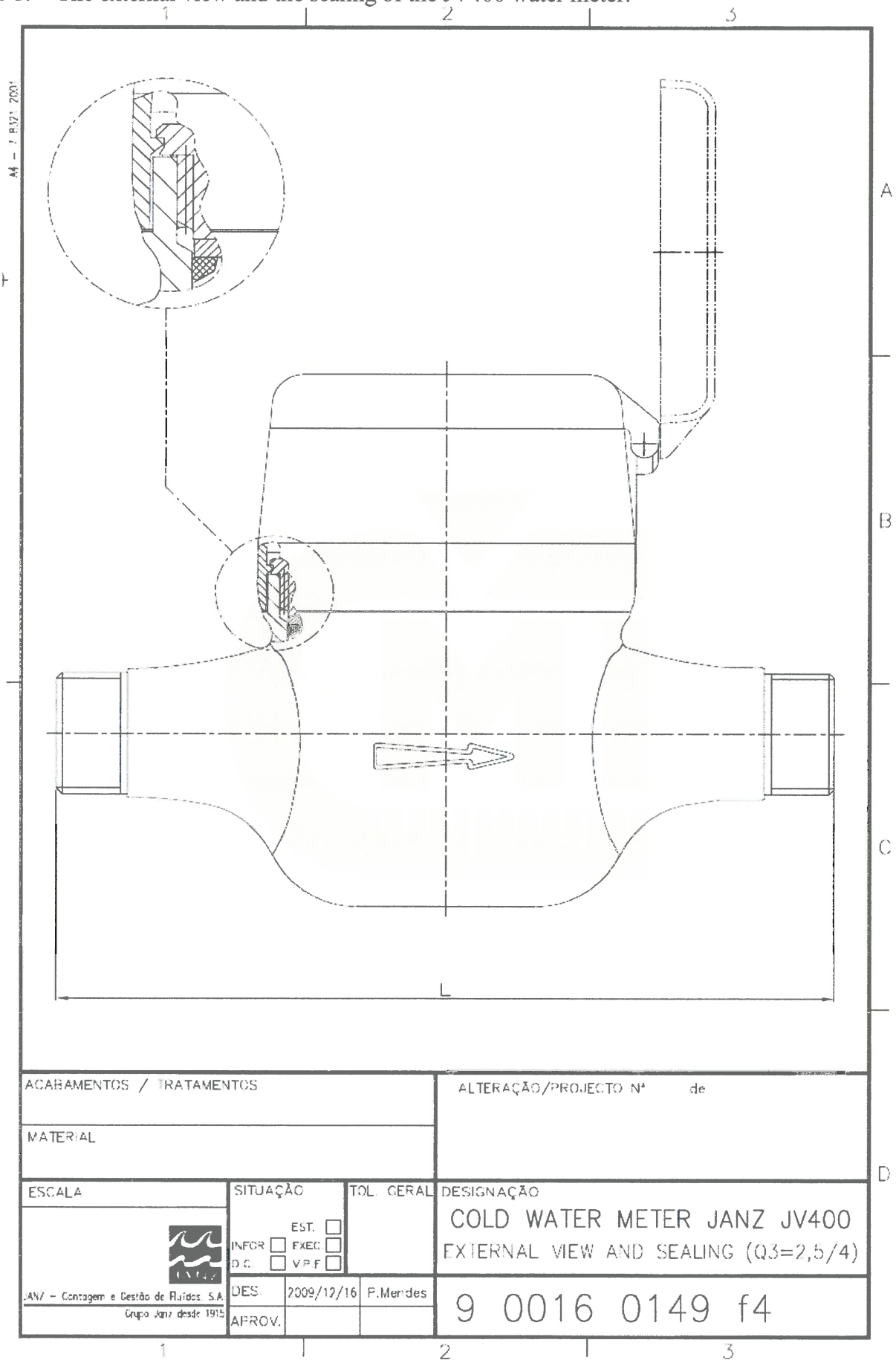

Figure 2: The external view and the sealing of the JV400 water meter:

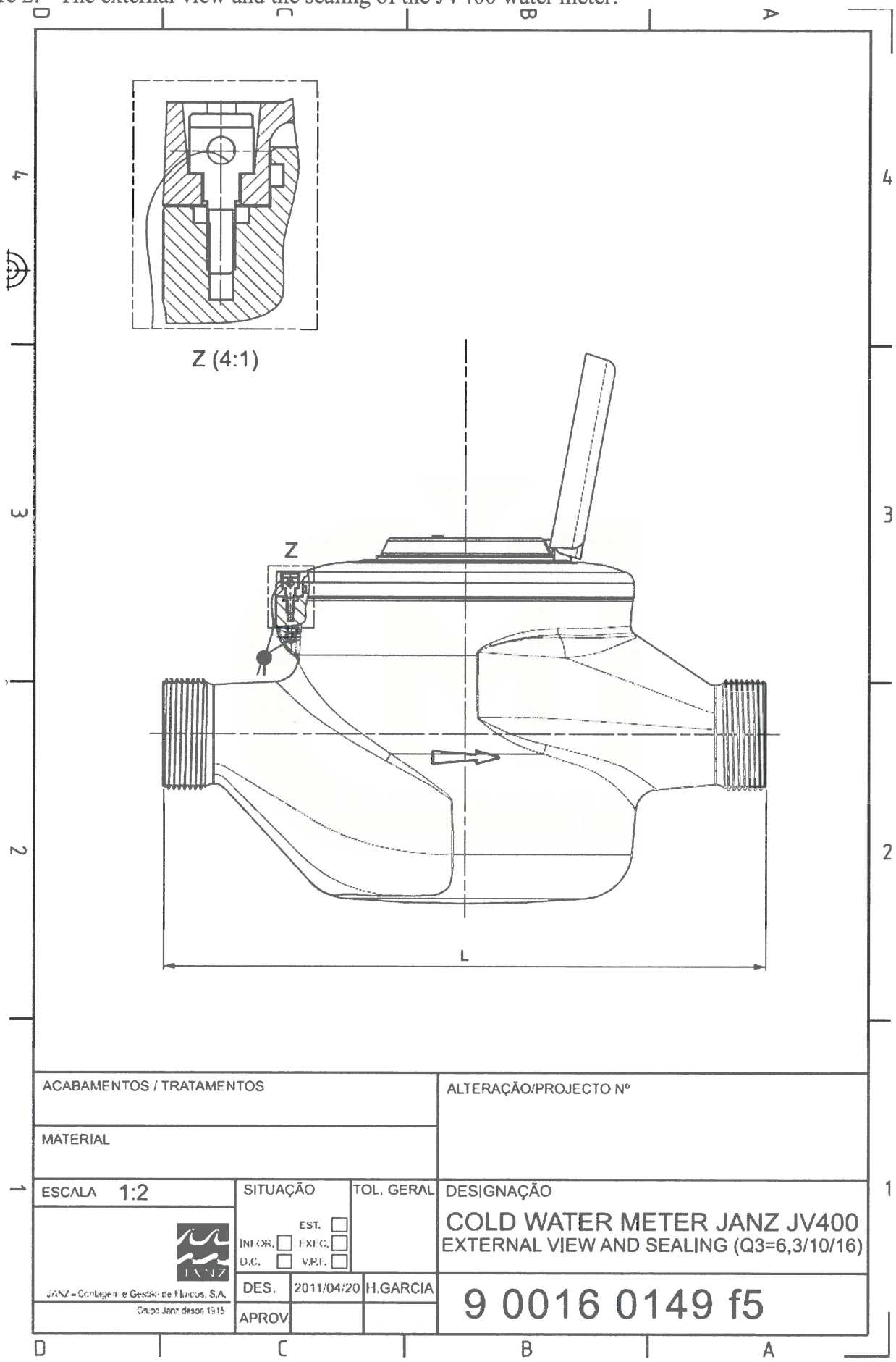

Figure 3: The water meter type JV400 with reed impulse and inductive sensors – view and sealing:

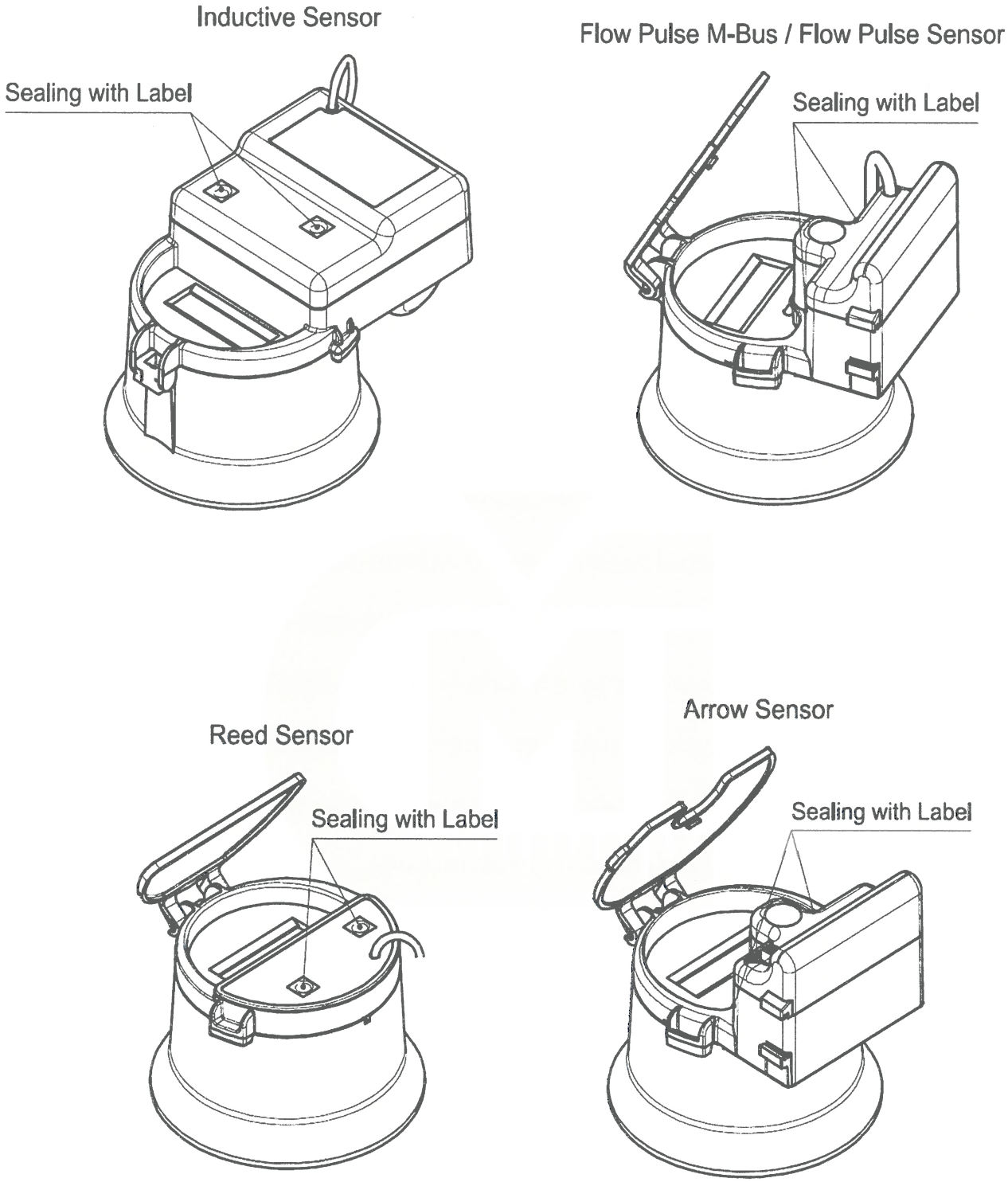

Figure 4: The maintenance sealing scheme (alternative) of the JV400 water meter:

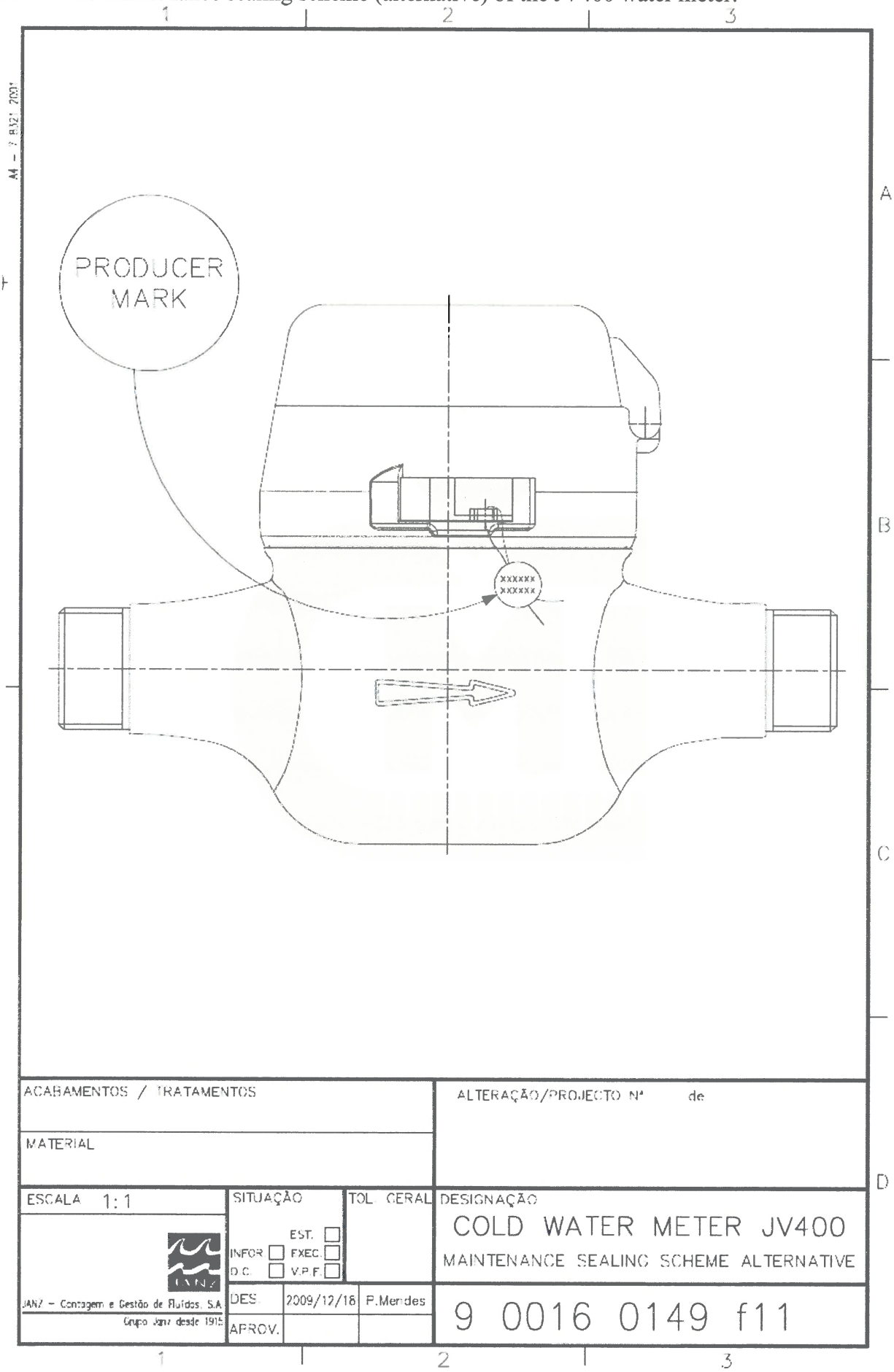

Figure 5: The dials of the JV400 water meter – flat type (Q_3 = 2.5 m^3/h):

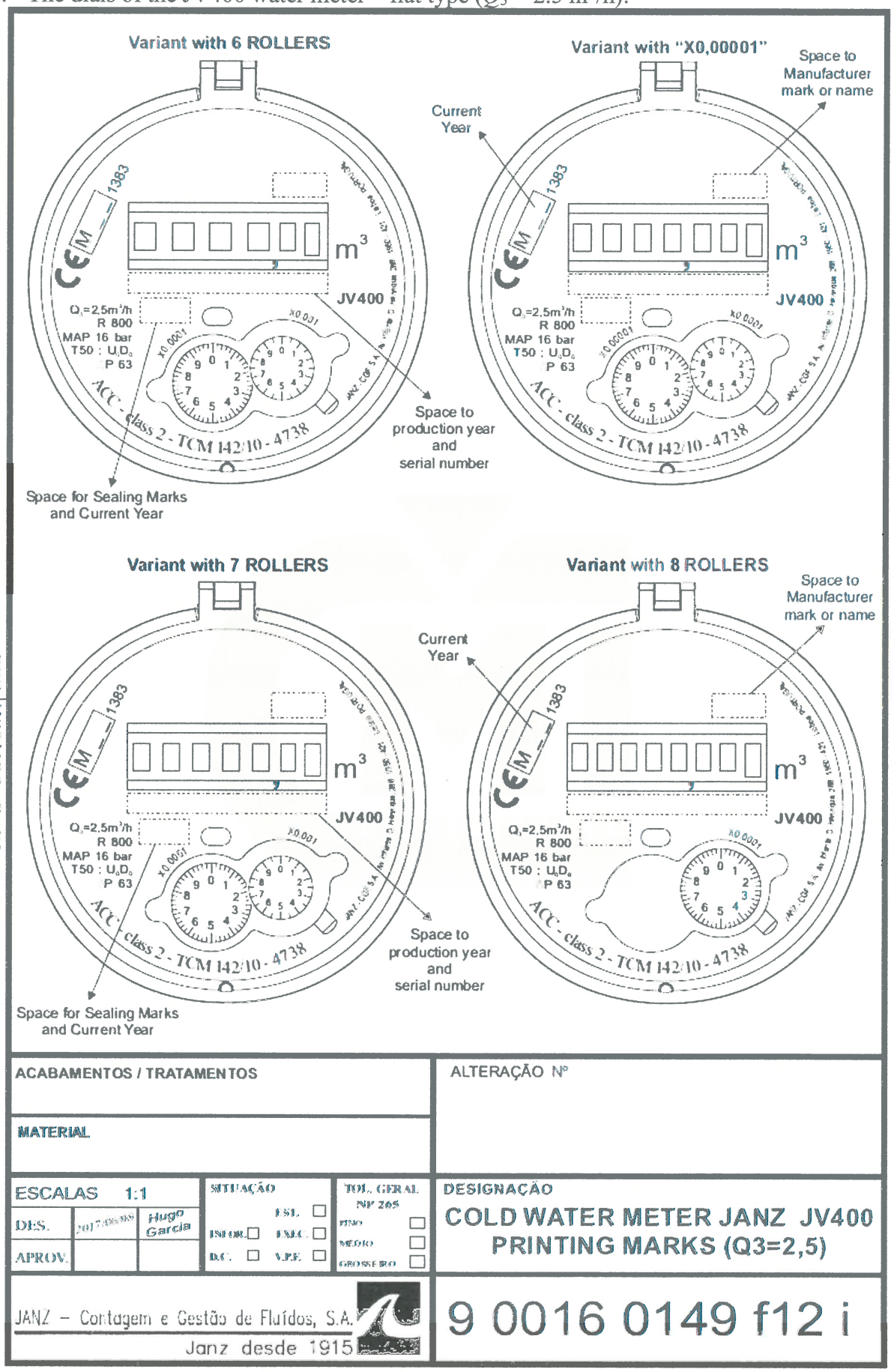

(Processado por computador) A4 - 7 8321 0001
Este documento não pode ser reproduzido nem cedido a terceiros, total ou parcialmente, sem a nossa autorização formal
This document can't be reproduce or given away, in whole or in part, without our formal consent
JANZ - CGF, S.A.

Figure 6: The dial of the JV400 water meter – flat type (Q_3 = 2.5 m^3/h):

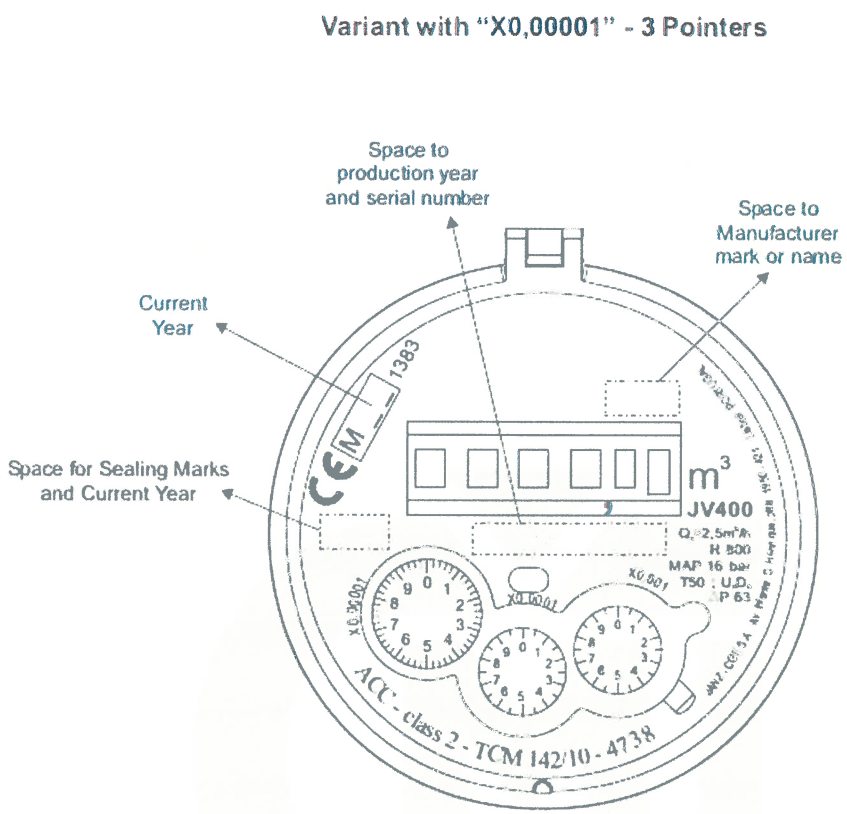

ACABAMENTOS / TRATAMENTOS			ALTERAÇÃO Nº
MATERIAL			
ESCALAS 1:1	SITUAÇÃO	TOL. GERAL NP 265	DESIGNAÇÃO
DES. 2017.06.08 Hugo Garcia	ESE. ☐ INFOR. ☐ ENLC. ☐ D.C. ☐ V.P.E. ☐	FINO ☐ MÉDIO ☐ GROSSEIRO ☐	COLD WATER METER JANZ JV400 PRINTING MARKS (Q3=2,5)
APROV.			
JANZ – Contagem e Gestão de Fluídos, S.A. Janz desde 1915			9 0016 0149 f12.1 b

(Processado por computador) A4 - 7 8321 0001
Este documento não pode ser reproduzido nem cedido a terceiros, total ou parcialmente, sem a nossa autorização formal
This document can't be reproduced or given away, in whole or in part, without our formal consent
JANZ - CGF, S.A. | Lisboa

Figure 7: The dials of the JV400 water meter – flat type (Q_3 = 4 m^3/h):

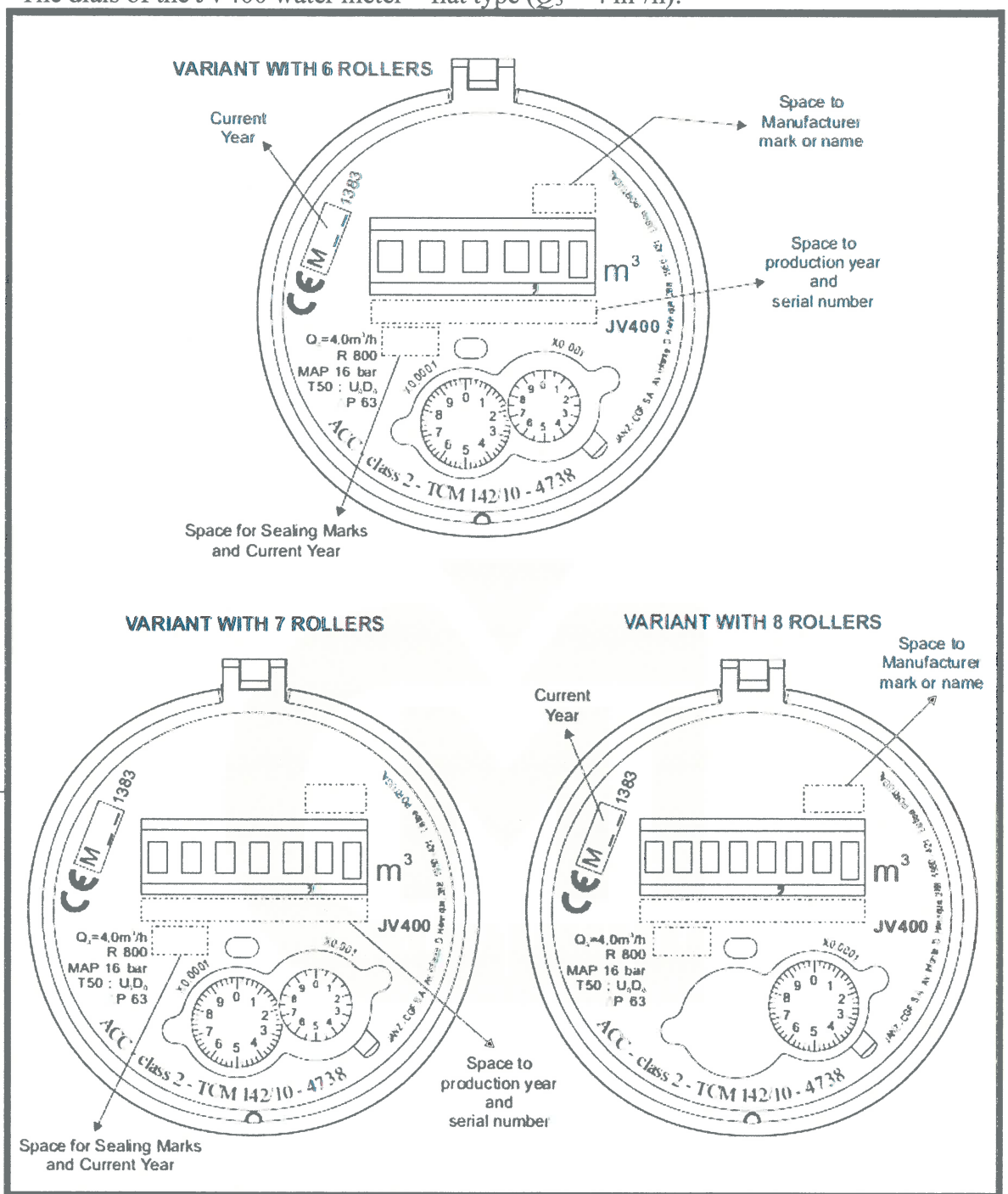

ACABAMENTOS / TRATAMENTOS	ALTERAÇÃO Nº
MATERIAL	

ESCALAS 1:1			SITUAÇÃO	TOL. GERAL NP 265	DESIGNAÇÃO
DES.	2017-06-08	Hugo Garcia	ESL. ☐ INFOR. ☐ EXEC. ☐ D.C. ☐ V.P.E. ☐	FINO ☐ MÉDIO ☐ GROSSEIRO ☐	COLD WATER METER JANZ JV400 PRINTING MARKS (Q3=4)
APROV.					

JANZ – Contagem e Gestão de Fluídos, S.A.
Janz desde 1915

9 0016 0149 f15 d

(Processado por computador) A4 - 7 8321 0001
Este documento não pode ser reproduzido nem cedido a terceiros, total ou parcialmente, sem a nossa autorização formal
This document can't be reproduced or given away, in whole or in part, without our formal consent
JANZ - CGF, S.A. | Lisboa

Figure 8: The dials of the JV400 water meter – flat type (Q_3 = 6.3 - 10 m^3/h):

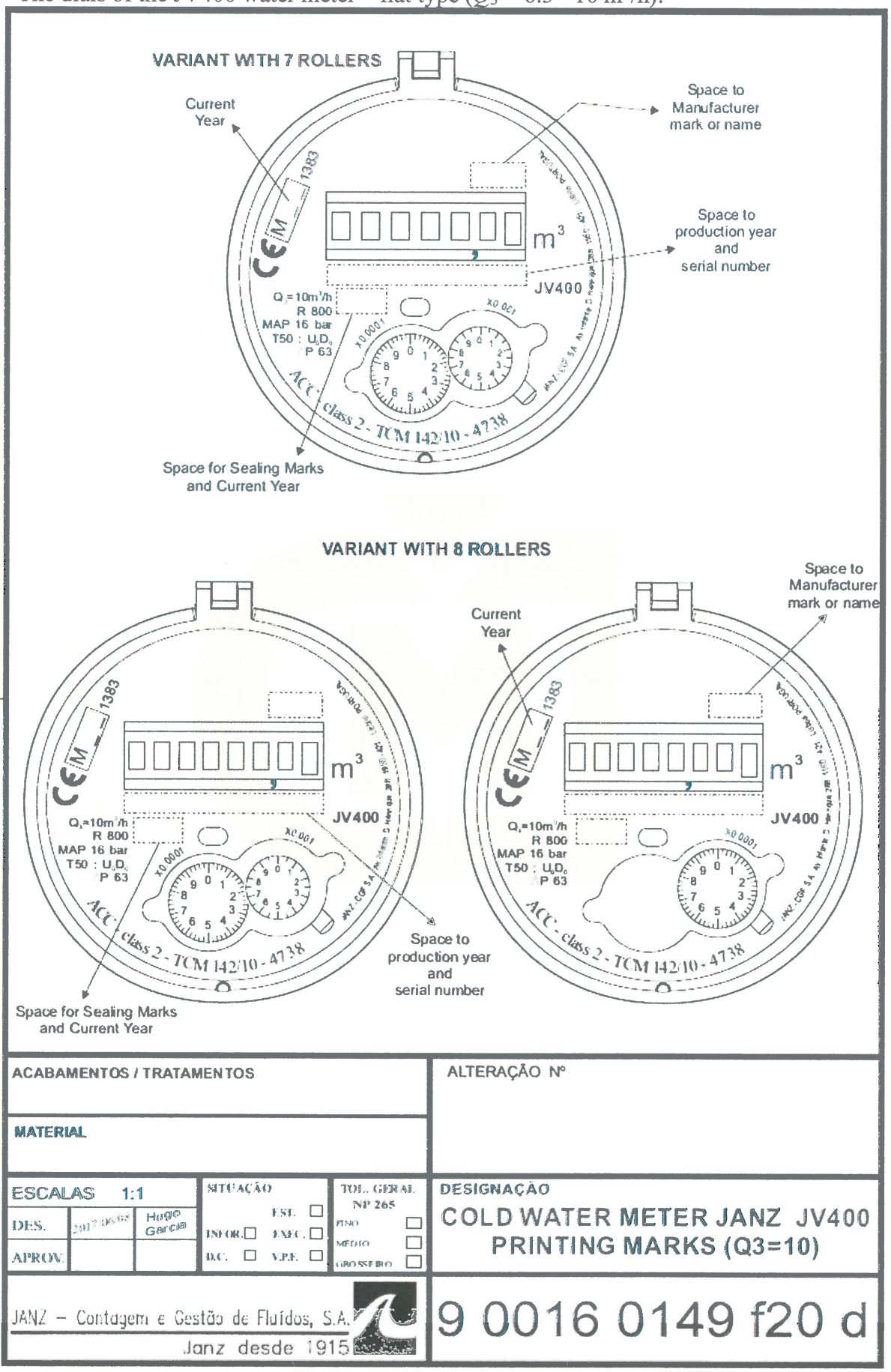

(Processado por computador) A4 - 7 8321 0001
Este documento não pode ser reproduzido nem cedido a terceiros, total ou parcialmente, sem a nossa autorização formal
This document can't be reproduced or given away, in whole or in part, without our formal consent
JANZ - CGF, S.A. - Lisboa

Figure 9: The dials of the JV400 water meter – flat type (Q_3 = 16 m^3/h):

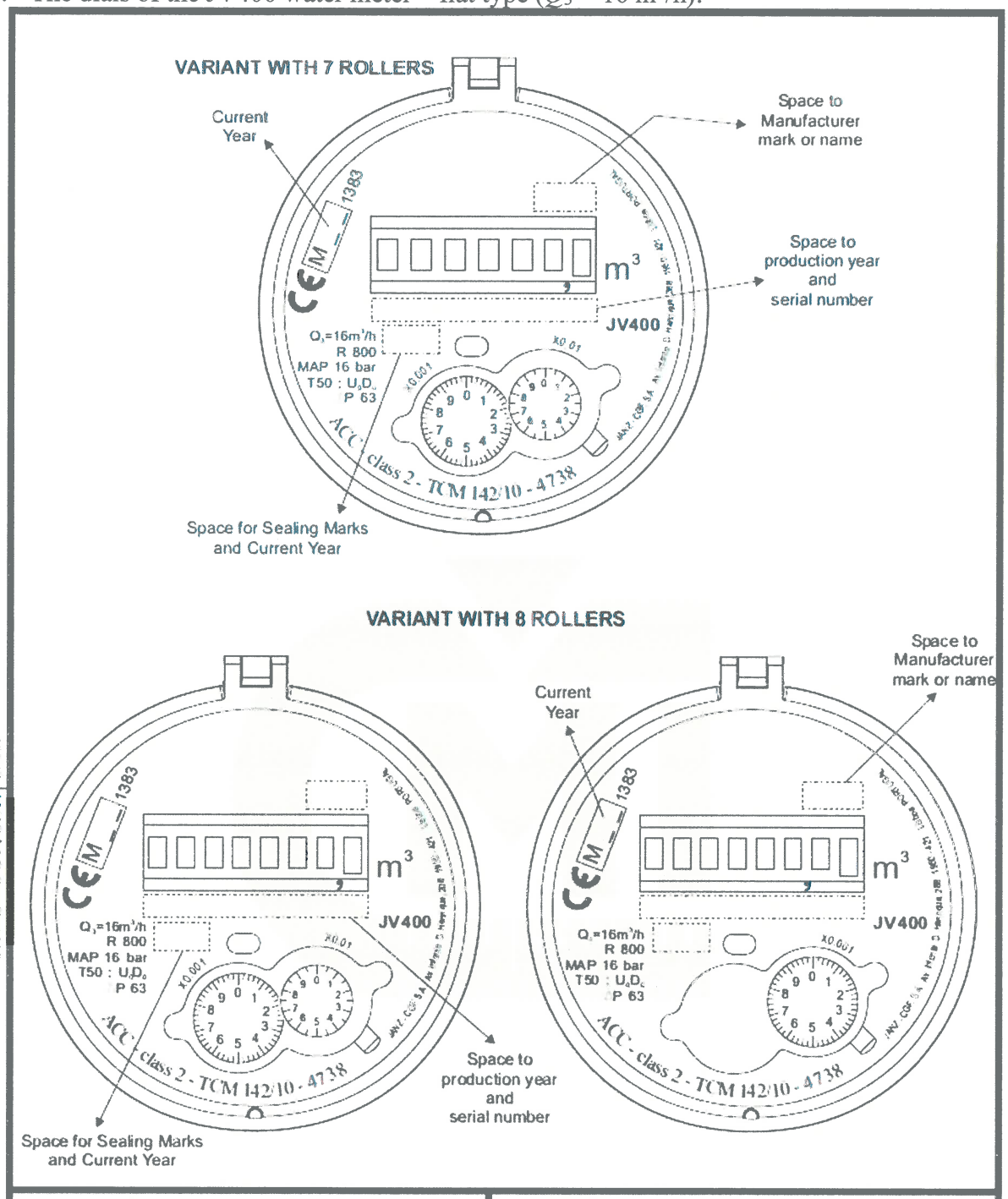

ACABAMENTOS / TRATAMENTOS	ALTERAÇÃO Nº
MATERIAL	
ESCALAS 1:1	SITUAÇÃO / TOL. GERAL NP 265
DES. 2017/06/23 Hugo Garcia	EST. INFOR. ENC. D.C. V.P.F.
APROV.	FINO MÉDIO GROSSEIRO
JANZ – Contagem e Gestão de Fluídos, S.A. Janz desde 1915	DESIGNAÇÃO: COLD WATER METER JANZ JV400 PRINTING MARKS (Q3=16)
	9 0016 0149 f22 d

(Processado por computador) A4 - 7 8321 0001
Este documento não pode ser reproduzido nem cedido a terceiros, total ou parcialmente, sem a nossa autorização formal
This document can be reproduced or given away, in whole or in part, without our formal consent
JANZ - CGF, S.A. | Lisboa

Figure 10: The dials of the JV400 water meter – inclined type:

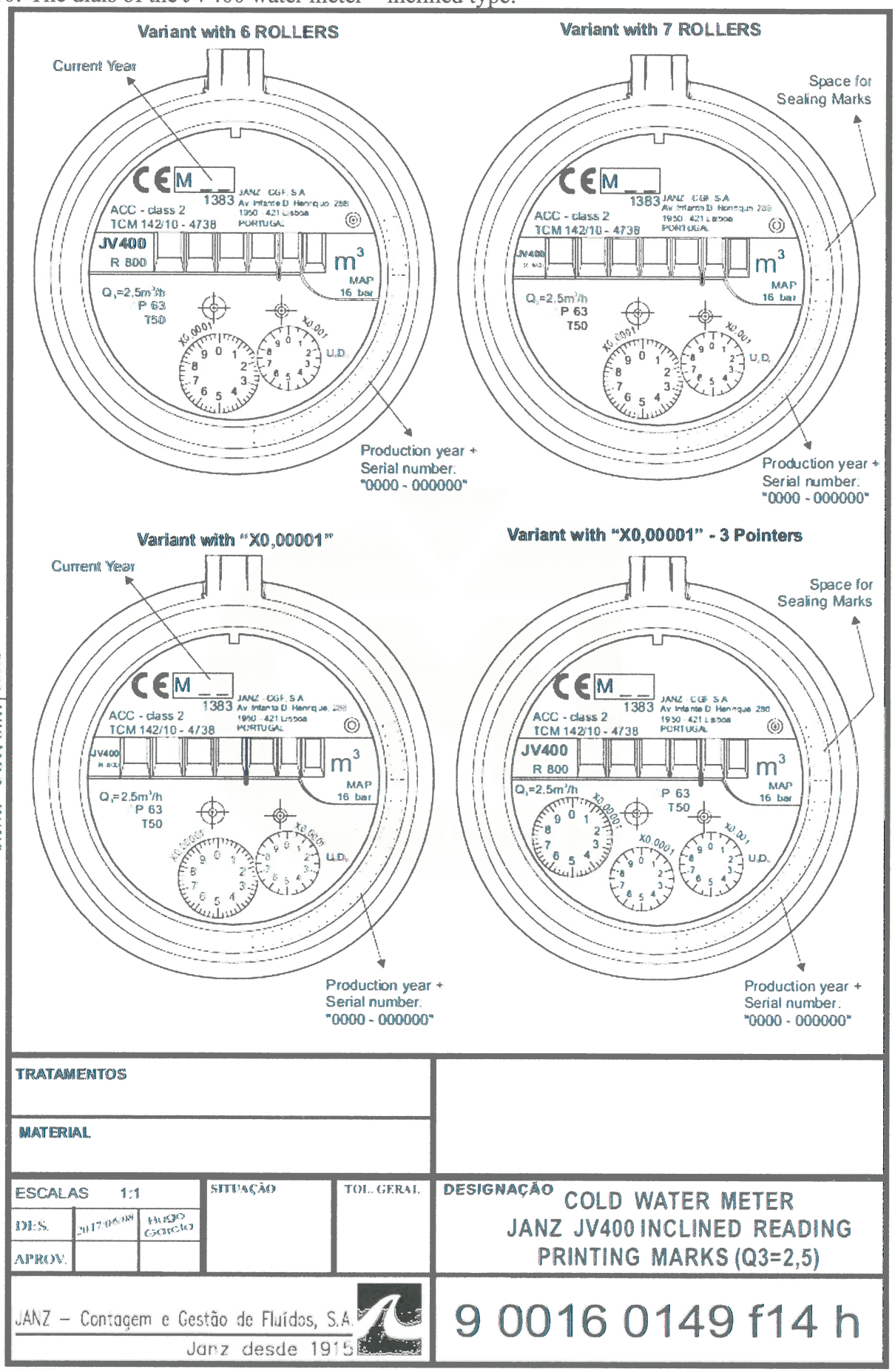

TRATAMENTOS	
MATERIAL	

ESCALAS 1:1		SITUAÇÃO	TOL. GERAL	DESIGNAÇÃO COLD WATER METER JANZ JV400 INCLINED READING PRINTING MARKS (Q3=2,5)
DES.	2017/06/08	HUGO GORCIO		
APROV.				

JANZ – Contagem e Gestão de Fluídos, S.A.
Janz desde 1915

9 0016 0149 f14 h

Este documento não pode ser reproduzido nem cedido a terceiros, total ou parcialmente, sem a nossa autorização formal.
This document can't be reproduced or given away, in whole or in part, without our formal consent.
JANZ - CGF, S.A. | Lisboa

Figure 11: The superdry dial of the JV400 water meter:

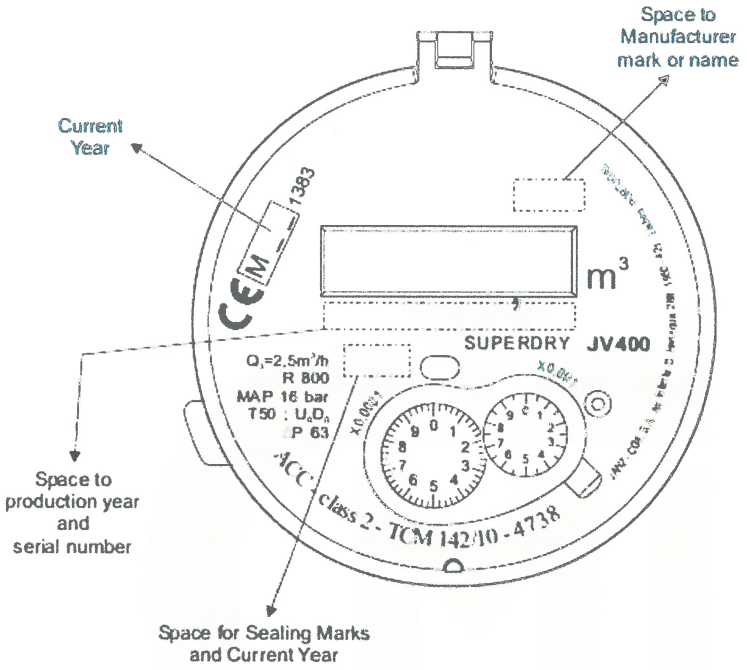

(Processado por computador) A4 - 7 8321 0001
Este documento não pode ser reproduzido nem cedido a terceiros, total ou parcialmente, sem a nossa autorização formal.
This document can't be reproduced or given away, in whole or in part, without our formal consent.
JANZ - CGF, S.A. | Lisboa

ACABAMENTOS / TRATAMENTOS	ALTERAÇÃO Nº de
MATERIAL	
ESCALAS 1:1	SITUAÇÃO / TOL. GERAL NP 265
DES. 2017.06.07 HUGO GOICO	ESL. / INDUS. / EXEC. / D.C. / N.P.E. / FINO / MÉDIO / GROSSEIRO
APROV.	
DESIGNAÇÃO: COLD WATER METER JANZ JV400 SUPERDRY PRINTING MARKS (Q3=2,5)	
JANZ - Contagem e Gestão de Fluídos, S.A. Janz desde 1915	9 0016 0149 f13 f

Figure 12: The water meter type JV400 - Q3=2,5/4 with radio modul (Add ON version)– view and sealing:

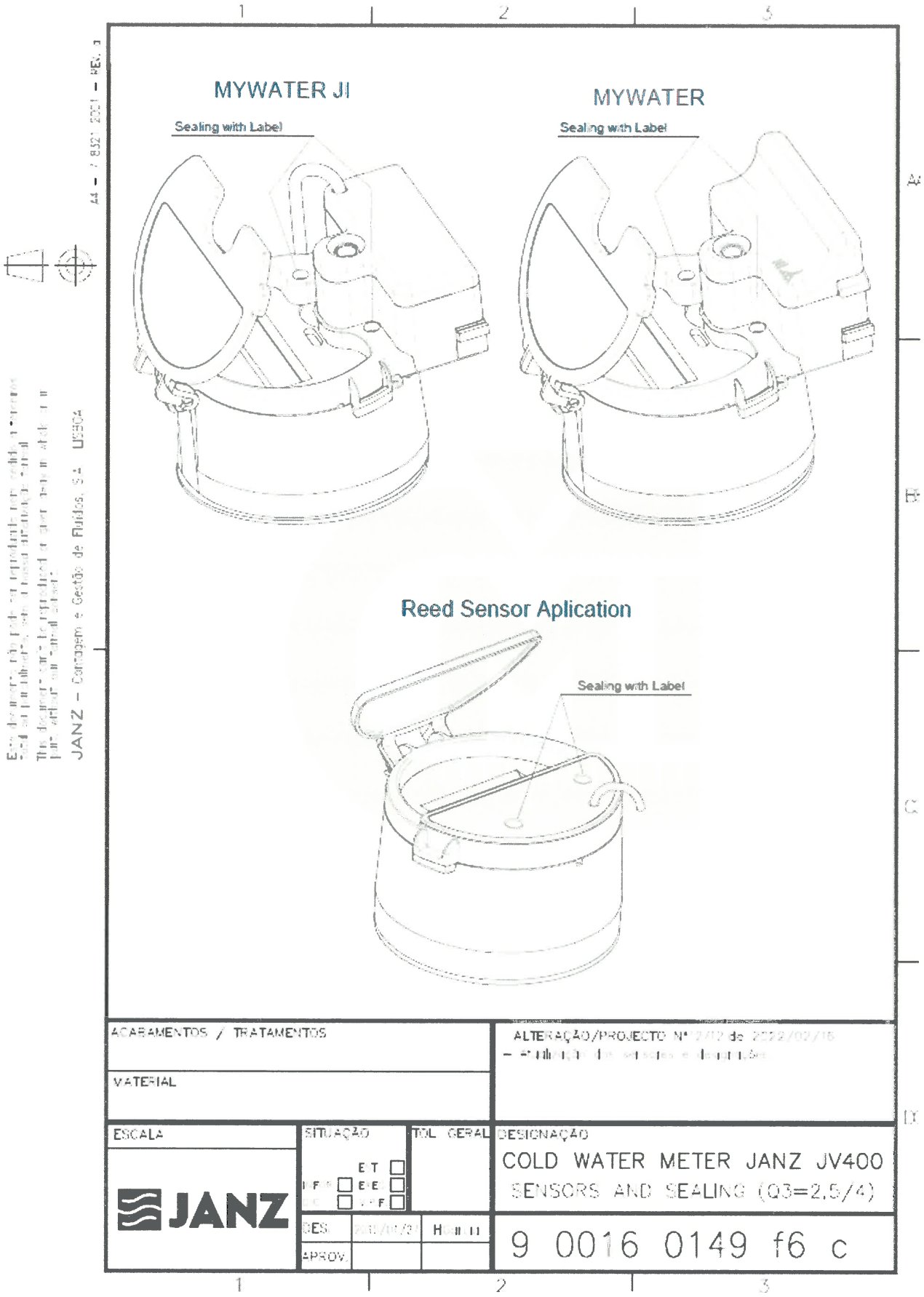

Figure 13: The water meter type JV400 - Q3=6,3/10/16 with radio modul (Add ON version) – view and sealing:

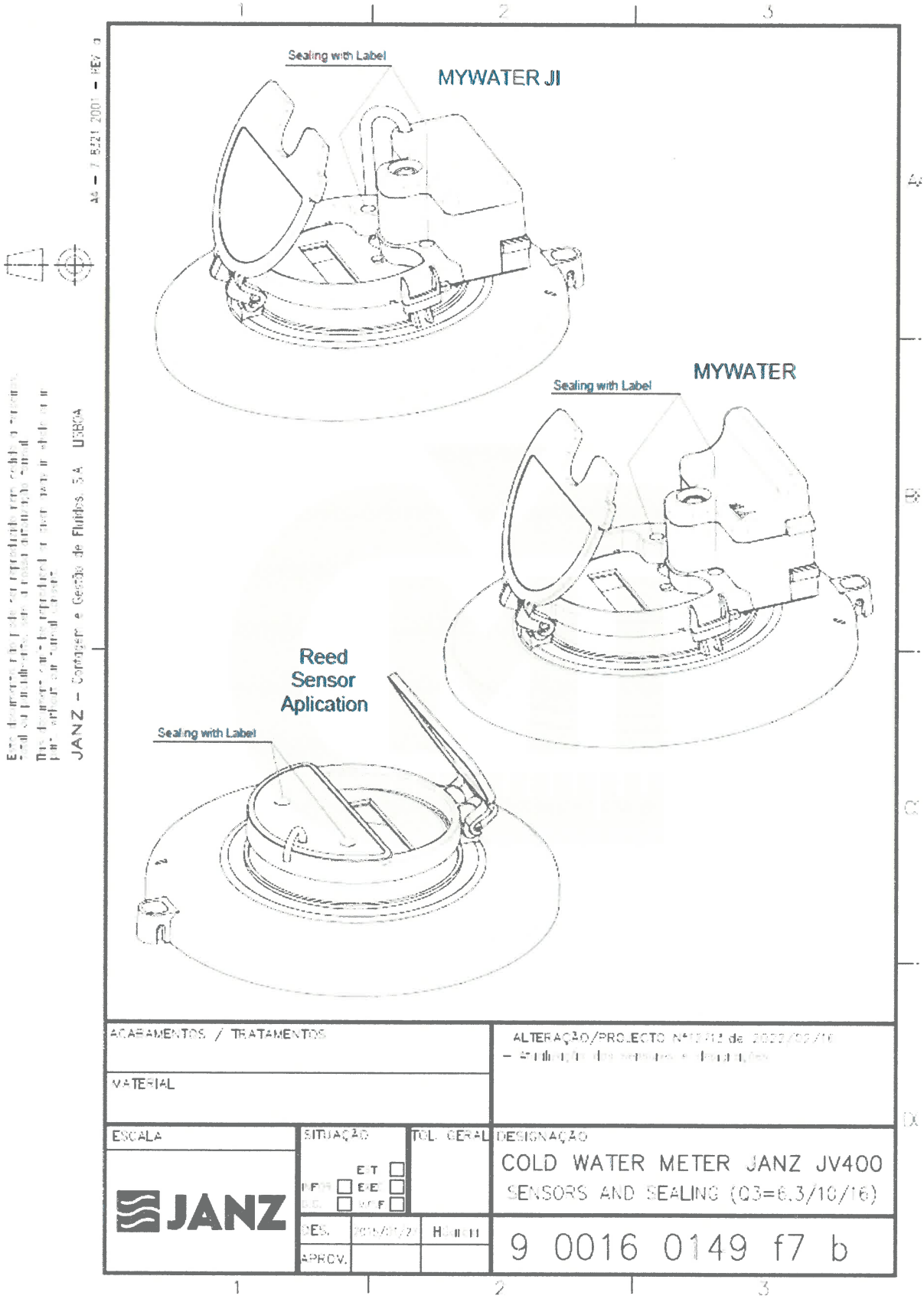

Figure 14: The water meter type JV400 - Q3=2,53/4 with radio modul (embedded version):

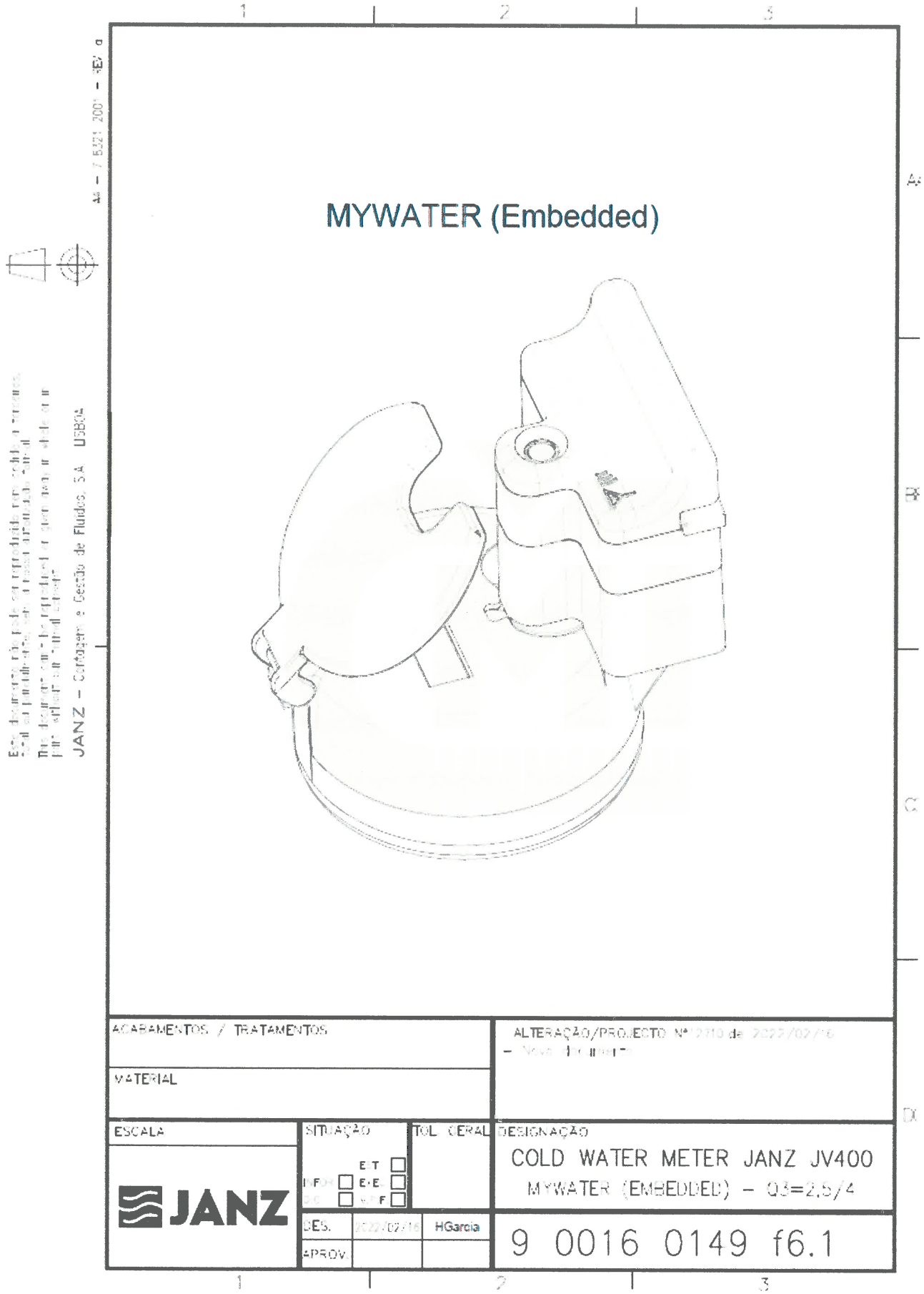
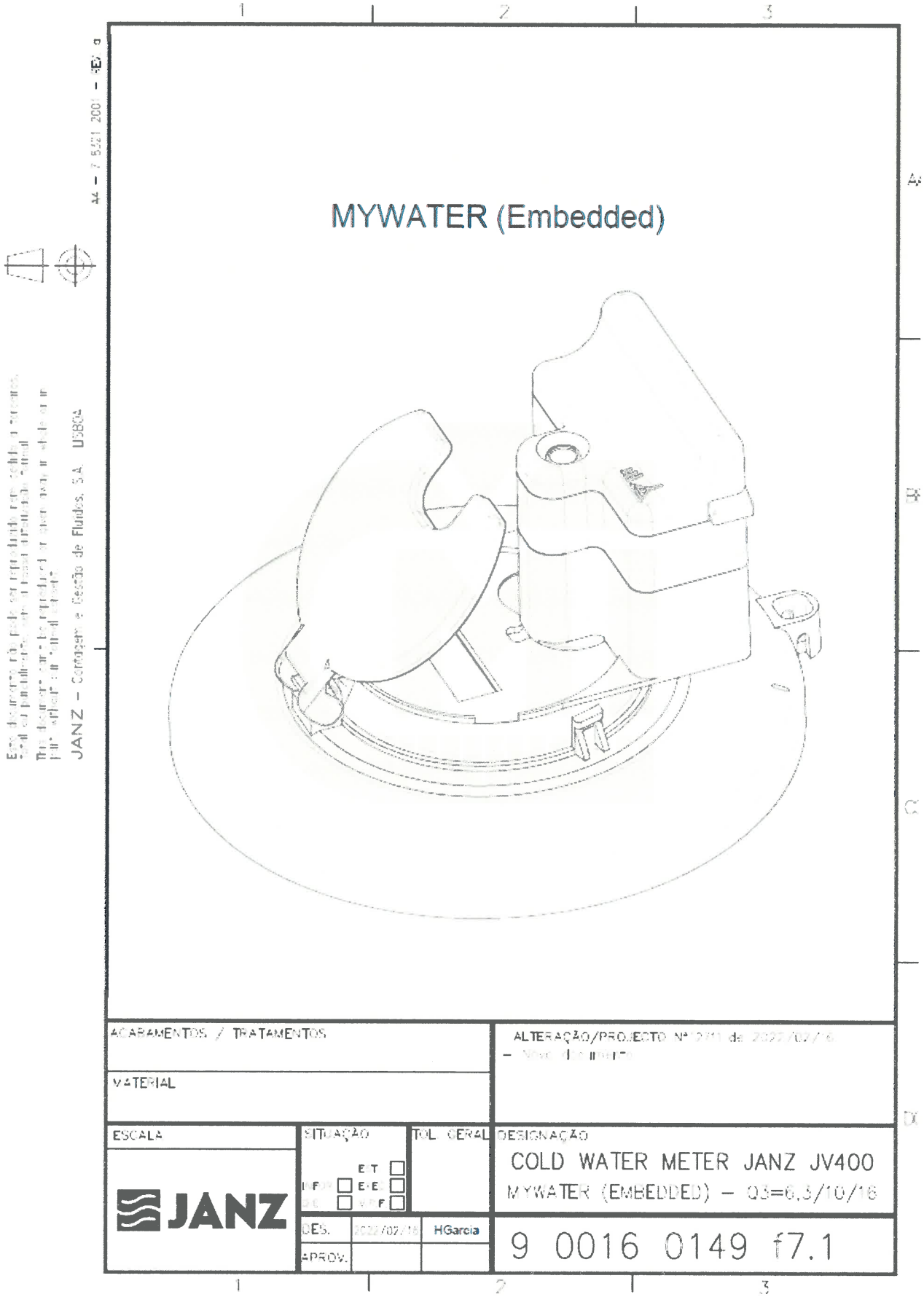
Figure 15: The water meter type JV400 - Q3=6,3/10/16 with radio modul (embedded version):